SensorsX

SX-PFXBAS01 Series

Flexible Piezoelectric Film — Sleep Monitoring Sensor (PVDF)

Sleep Monitoring | Heart Rate | Respiration | Pulse | Vital Signs

18-30 pC/N Piezoelectric Constant d33	**10-14 μm** Film Thickness	**1.5-3.0 nF** Capacitance
> 1,000,000 Flex Cycles	**45x4 mm x3** Sensing Area (3 zones)	**PVDF** Sensing Material

Sleep Monitoring | Heart Rate | Respiration | Pulse | Vital Signs

■ PRODUCT OVERVIEW

The SX-PFXBAS01 thin-film piezoelectric sensor is a high-sensitivity sleep monitoring sensor. When the sensor detects dynamic signals such as heart rate, respiration, and pulse during human sleep, micro-strain is generated inside the sensor, producing an electrical signal between the upper and lower electrode surfaces of the piezoelectric film. After signal conditioning, filtering, and data processing, vital sign information is obtained. This product uses PVDF as the piezoelectric sensing material and consists of an electrode layer, a sensing layer, and a polyester protective layer.

■ KEY FEATURES

◆ Simple Structure Simple construction with minimal components	◆ Thin & Lightweight Thin profile with low mass for minimal interference
◆ High Sensitivity High-sensitivity dynamic strain and pressure detection	◆ Excellent Flexibility Good flexibility and bend resistance
◆ Chemical Resistance Resistant to chemical corrosion	

■ TYPICAL APPLICATIONS

Industries Served

● Sleep heart rate monitoring	● Sleep respiration monitoring	● Pulse monitoring during sleep
● Vital signs detection	● Healthcare monitoring devices	● Wearable health technology

■ PERFORMANCE SPECIFICATIONS

The information in this document is subject to change without notice. SensorsX Technology Inc. assumes no responsibility for errors or omissions.

Sensor Characteristics	
Film Thickness	10-14 μm
Piezoelectric Constant d33	18-30 pC/N
Capacitance	1.5-3.0 nF
Sensing Material	PVDF (Polyvinylidene fluoride)
Sensor Structure	Electrode layer + sensing layer + polyester protective layer
Sensing Area	45 x 4 mm x 3 sensing zones
Pin Pitch	2.54 mm (0.100 in)
Connection Type	Terminal
Environmental	
Operating Temperature	-20 to 100 °C (-4 to 212 °F)
Mechanical	
Flex Cycles	> 1,000,000
Frequency Band	< 100 MHz
Overall Dimensions	280 mm (11.02 in) length — see dimension drawing below

■ MECHANICAL DIMENSIONS

SX-PFXBAS01 — Dimension Drawing

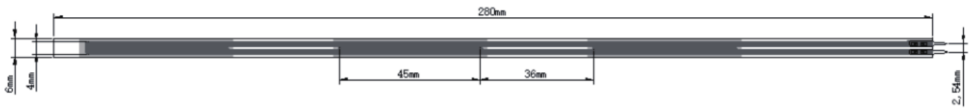

■ WIRING DIAGRAM

SX-PFXBAS01 (SPE-002) — Reference Circuit Diagrams

Charge Amplifier Circuit (Reference)

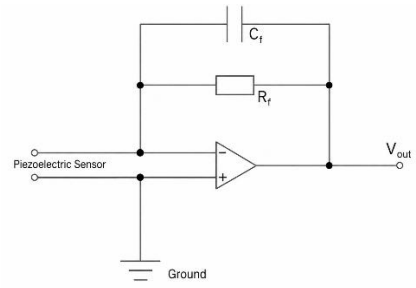

Voltage Amplifier Circuit (Reference)

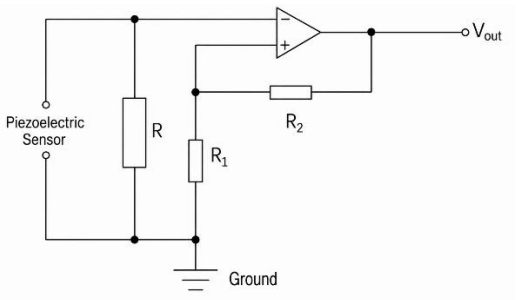

※ Reference circuit diagrams only. Cf and Rf values depend on application frequency range and gain requirements. Consult application notes for component selection.

※ Sensor shape and sensing area dimensions are customizable — contact SensorsX Technology Inc. for custom configurations.

The information in this document is subject to change without notice. SensorsX Technology Inc. assumes no responsibility for errors or omissions.