SensorsX

SX-MAPUA Series

General-Purpose Piezoelectric Accelerometer

Industrial vibration sensing with electrical isolation



±80 g Accelerometer Range	**100 mV/g** Sensitivity	**1%** Nonlinearity
2 – Pin MIL-C-5015 Connector	**−50 to +120 °C** Operating Temperature	**316L Stainless Steel** Housing Material

■ OVERVIEW

The SX-MAPUA Series is a general-purpose piezoelectric accelerometer for industrial vibration measurement. It features a shear-mode piezoelectric ceramic sensing element, a measurement range of ±80 g, and a nominal sensitivity of 100 mV/g with a tolerance of ±5%. Power and vibration signal share a 2-pin MIL-C-5015 connector. The sensor has a laser-welded 316L stainless steel housing with IP68 ingress protection. Housing-to-circuit dielectric withstand is specified at 4 kV AC for 1 minute.



■ KEY FEATURES

◆ ±80 g Measurement Range	◆ 100 mV/g Acceleration Sensitivity
◆ Shear-Mode Piezoelectric Ceramic Sensing Element	◆ 2-Pin MIL-C-5015 Electrical Connector
◆ 316L Stainless Steel Housing with IP68 Protection	◆ 4 kV AC Housing-to-Circuit Dielectric Withstand for 1 Minute

Specifications are subject to change without notice. Confirm the final configuration at time of order.

■ TYPICAL APPLICATIONS

- General Machinery Vibration Monitoring
- Motor and Pump Vibration Monitoring
- Fan and Compressor Vibration Monitoring
- Rotating Machinery Condition Monitoring

■ SPECIFICATION LIST

Test Conditions: 25 °C, 24 V DC, 4 mA at 160 Hz

■ VIBRATION PERFORMANCE

Parameter	Specification
Measurement Range	±80 g
Sensitivity, ±5%	100 mV/g
Frequency Response, ±5%	3–5,000 Hz
Frequency Response, ±10%	2–10,000 Hz
Frequency Response, ±3 dB	0.5–15,000 Hz
Mounted Resonant Frequency	≥25,000 Hz
Maximum Transverse Sensitivity	≤5%
Temperature Response, −40 to +120 °C	≤10%
Nonlinearity	≤1%

■ OPERATING ENVIRONMENT

Parameter	Specification
Operating Temperature	−50 to +120°C
Shock Limit (peak)	5,000 g
Degree of Protection	IP68

■ ELECTRICAL CHARACTERISTICS

Parameter	Specification
Excitation Voltage	18–30 V DC
Constant-Current Excitation	2–10 (typical 4) mA
Bias Voltage	10–14 V DC
Output Impedance	<100Ω
Insulation Resistance at 100 V DC	≥100 MΩ

Specifications are subject to change without notice. Confirm the final configuration at time of order.

Housing-to-Energized-Circuit Power-Frequency Withstand Voltage	4,000 V AC / 1 min; voltage rise 30 s; leakage current ≤5 mA; no flashover or breakdown
Broadband Noise	100μV

■ PHYSICAL CHARACTERISTICS

Parameter	Specification
Housing Material	316L stainless steel
Sealing Method	Laser welding
Sensing Material and Type	Piezoelectric ceramic, shear mode
Electrical Connector	2-pin MIL-C-5015
Shielding and Isolation	Internally shielded and isolated
Mounting Torque	2.7–6.8 N·m
Weight	≤85 g

■ INTERNAL WIRING

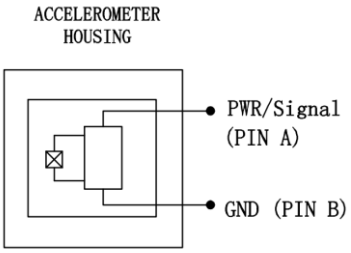

PWR/Signal (PIN A); GND (PIN B)

Specifications are subject to change without notice. Confirm the final configuration at time of order.

■ MECHANICAL DIMENSIONS

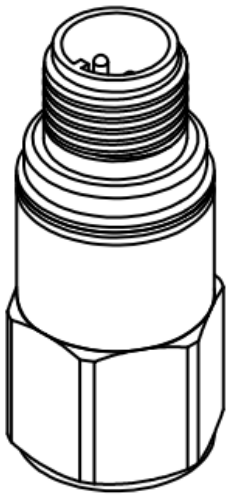

Product Configuration

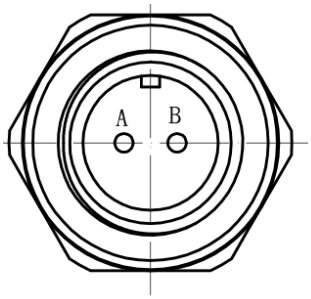

2-Pin Terminal View

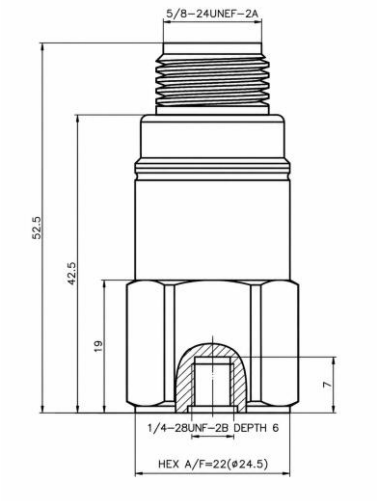

Mechanical Dimensions

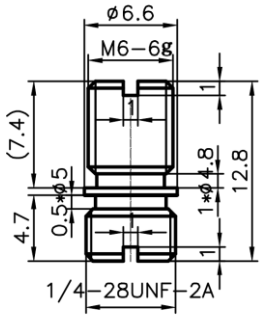

1/4-28 UNF to M6 Adapter Stud

Parameter	Specification
Overall Height	52.5 mm
Housing Height	42.5 mm
Hex Height	19 mm
Bottom Feature Height	7 mm
Electrical Connector Thread	5/8-24 UNEF-2A
Mounting Thread	1/4-28 UNF-2B, 6 mm deep
Across Flats	22 mm

Specifications are subject to change without notice. Confirm the final configuration at time of order.

■ ORDERING INFORMATION

Model: SX-MAPUA Series

Complete model number example: SX-MAPUA-111112

Measurement Range	
1	±80 g
Nonlinearity Accuracy	
1	1%
Connection	
1	1/4-28 UNF-Female
Sensitivity (Output)	
1	100 mV/g
Electrical Connection	
1	MIL-C-5015, 2-pin
Housing Material	
2	316L Stainless Steel
Customization Options	
D	Custom Configuration — Specify Requirements When Ordering

Specifications are subject to change without notice. Confirm the final configuration at time of order.